CONNECTION HEAD - type DANAWdic

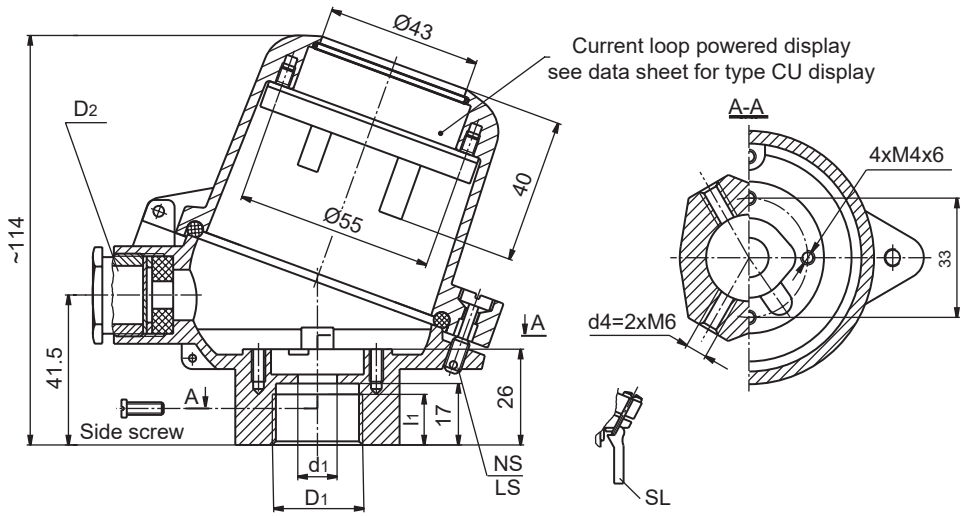

(1)	DANAW	ORDERING CODE						SPECIFICATION
(10)	Display type	dic						Current loop powered LED display – CU0
(2)	Material of elements	1						Metal parts - nickel - plated brass; seals-oil resistant rubber* (–20...70ºC)
		3						Cable gland - nickel - plated brass; other metal parts - stainless steel; seals-oil resistant rubber (–20...70ºC)
(3)	Cable gland thread	M2						M20x1.5
		G2						G½
		N2						½NPT (empty thread only)
		P1						Pg16
(4)	Type of cable gland seal	A						Without notches
		B						With notches
		X						No gland, threaded hole only
(5)	Type of process thread D_1/d_1					D_1[ø]	d_1 [ø]	l_1	d4
		1				Ø15.3	Ø11	-	M6x20
		2				Ø22.5	Ø14	-	M6x16
		3				Ø26.5	Ø14	-	M6x16
		4				Ø32.5	Ø18	-	M6x10
		5				M24x1.5	Ø14	14	-
		6				G⅜	Ø11	14	-
		7				G½	Ø11	14	-
		8				G¾	Ø14	14	-
		9				½NPT	Ø17.35	20	-
		10				¾NPT	Ø22.70	20	-
(6)	Side screw d4=2xM6	a				Screw - Carbon steel zinc - plated			
		c				Screw - Brass nickel - plated			
		e				Screw - Stainless steel			
		x				No tube side screw			
(7)	Cover closure	NS				Screws without leaden seal holes			
		LS				Screws with leaden seal holes			
		SL				Snap lock			
(8)	Paint type	P				Polyester			
		E				Epoxy			
		C				Creodur - Rafil			
		SE				Spray Epoxy			
		SPU				Spray polyurethane on (SE) layer			
(9)	Paint colour			al		alu natural colour (only Creodur - Rafil)			
				yc		RAL 1007 daffodil yellow			
				ys		RAL 1003 signal yellow			
				bs		RAL 5005 signal blue			
				sb		RAL 5015 sky blue			
				sg		RAL 7032 pebble grey			
				gr		RAL 7035 light grey			
				ag		RAL 9002 grey white			
				sh		RAL 9006 white aluminium			
				gs		RAL 9007 grey aluminium			
				cw		RAL 9010 pure white			
				wa		white aluminium (substitute of Cal, only Polyester)			

exception: *cover pin - zinc - plated carbon steel

Kg
~0.40 Kg

33

Maine features:

- material of body, cover and snap lock lever - aluminium pressure die-castings
- cable gland washer - zinc-plated press steel
- link of snap lock - nickel-plated springing steel
- temperature range: 0÷60ºC
- maximum space for transmitter: Ø45x30mm

Ordering example:

(1)	(10)	(2)	(3)	(4)	(5)	(6)	(7)	(8)	(9)
DANAW	dic	1	- M2	A	- 5	x	- NS	- P	sh

Options:
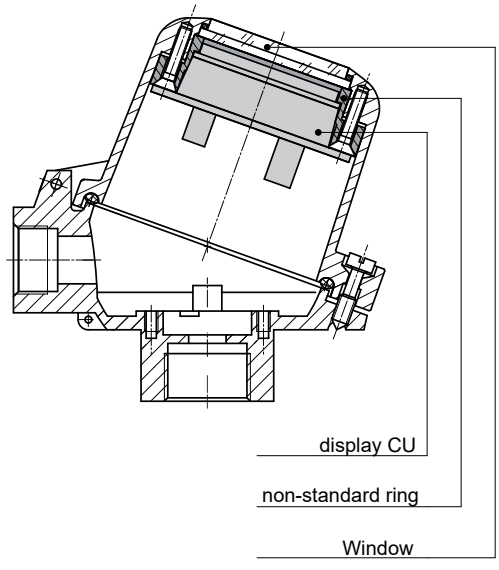
- IP66, IP68 only optional version with non-standard ring located under the window cover. If needed select this option in the order.