limatherm COMPONENTS

CONNECTION HEAD - type XD-AB

33

Kg ~0.60 Kg

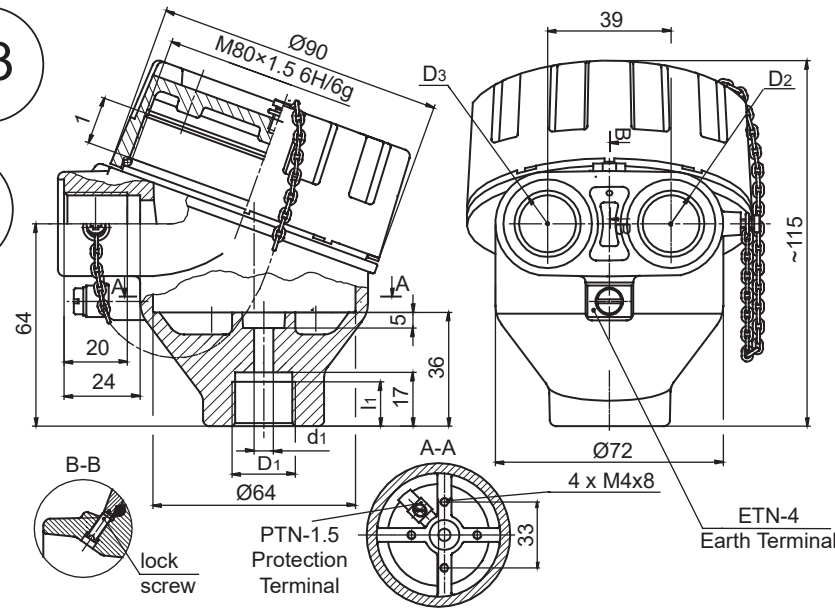

Flameproof
Zone 1, Zone 21
Zone 2, Zone 22

FTZU 03 ATEX 0074U
II 2 G Ex db II C Gb
II 2D Ex tb IIIC Db

IECEx FTZU 14.0003U
Ex db II C Gb
Ex tb IIIC Db

EX HEADS

06

	XD-AB	ORDERING CODE	SPECIFICATION
(2)	Material of elements	4	Metal parts - stainless steel; seals - silicone rubber
		5	Metal parts - stainless steel; seals - fluoroelastomer rubber
(3)	Cable gland thread D_2/D_3 Please choose two variants of thread, separately for D_2 and D_3 **For example: XD-AB-4-M2/CD...**	M2	M20x1.5 6H
		G2	G½; BSP½ (without cert.)
		G3	G¾; BSP¾ (without cert.)
		G4	G⅜; BSP⅜ (without cert.)
		N2	½NPTmod - modified ac. to OIT-17/03
		N3	¾NPTmod - modified ac. to OIT-17/03
		CD	CD = closed (D_3 only)
(4)	Type of process thread D_1	M2	M20x1.5 6H
		M24	M24x1.5 6H
		M27	M27x2 6H
		G2	G½; BSP½ *
		G3	G¾; BSP¾ *
		G4	G⅜; BSP⅜ *
		N2	½NPTmod - modified ac. to OIT-17/03
		N3	¾NPTmod - modified ac. to OIT-17/03
(5)	Symbol of hole d_1 diameter	6	Ø6 $^{+0.04}_{-0.05}$
		6.1	Ø6.1 H8
		8	Ø8 $^{+0.1}_{+0.02}$
		8.1	Ø8.1 H8
		9.6	Ø9.6 H8
		10	Ø10 $^{+0.1}_{+0.02}$
		10.1	Ø10.1 H7
		12.8	Ø12.8 H7
		13	Ø13 (non flameproof)
		15.1	Ø15.1 H7
		M16	M16x1.5 6H
			or other hole on request (non flamefroof)
(8)	Paint type	C	Creodur - Rafil
		SE	Spray epoxy
		SPU	Spray polyurethane on (SE) layer
(9)	Paint colour	al	alu natural colour (only Creodur - Rafil)
		yc	RAL 1007 daffodil yellow
		ys	RAL 1003 signal yellow
		bs	RAL 5005 signal blue
		sb	RAL 5015 sky blue
		sg	RAL 7032 pebble grey
		gr	RAL 7035 light grey
		ag	RAL 9002 grey white
		sh	RAL 9006 white aluminium
		gs	RAL 9007 grey aluminium
		cw	RAL 9010 pure white

Maine features:

- material of body and cover - aluminium pressure die-castings, max 0.5%Mg
- service temperature:
  T_{serv}= -50÷150ºC - silicone rubber
  T_{serv}= -20÷200ºC - fluoroelastomer rubber
- maximum space for transmitter: Ø42x47mm; Ø60x39mm
- coating: yellow chromating (optionally) and chemically resistant paint (outside only)

Material: aluminium EN AC 44200mod or EN AC 46000.

EN AC 46000 - the kind of material meets the requirements for use in potentially explosive areas.

EN AC 44200mod - the kind of material meets the requirements for use in potentially explosive areas.
In additon, it is characterized by increased strength (pressure) parameters, while at the same time shows reduced copper (Cu) concentration.

Caution:
The type EN AC 44200mod - available for certified products ATEX, IECEx, FM and CSA.
The type EN AC 46000 - available only for certified products ATEX and IECEx.

Ordering example:

(1)	(2)		(3)		(4)	(5)		(8)	(9)
XD-AB	4	-	M2/CD	-	M24/8.1		-	SE	sh

* in this case hole d1 must be flameproof (for arrange flameproof joint with sensor measuring insert). Flameproof possible only for gas.
For Ex tb - dust (for thread D1) require certification of the complete equipment.